ZELINSKY GROUP

COLLECTIVE PROTECTIVE EQUIPMENT

2019

ZELINSKY GROUP

Zelinsky Group is a leading developer and manufacturer of respiratory personal protective equipment based on materials and components of own production. It meets all the requirements of international standards. The aim of the brand is to protect people and the whole world, emphasizing the relationship with the case of the great scientist Nikolay Zelinsky, the creator of the first effective gas mask.

Zelinsky Group produces modern means of collective protection. They are designed for protection from explosive and radioactive substances, biological aerosols, radioactive dust and hazardous chemicals and used in defense buildings, space rockets and military equipment in Russia and in other countries.

Each product of Zelinsky Group passes daily strict quality control. Valuable experience, highly qualified specialists, ability to innovate are the main advantages of the company. For more than 80 years we have been successfully creating products that ensure the safety of life and health.

Our doors are always open for you. We will be glad to provide you with comprehensive assistance and offer products of the highest quality.

ABSORBING FILTER FPT-100 M

Purpose

The filter FPT-100M is designed to clean the air supplied to the objects from toxic substances, radioactive dust and bacterial agents.

- FPT-100 M is used as a part of filtering systems for mobile objects.

Technical characteristics

Name of indicator	Value of indicator
Nominal amount of air supplied to the absorbing filter, m^3/h, not less	100
Resistance to air flow with air supply in the amount of 200 m^3/h, kgf/m^2, not more	160
Tightness (inward leakage), %, not more than	0,1
Overall dimensions, mm	325x305x360
Weight, kg, not more	20

Shelf life – 10 years

Manufacturer:

JSC Tambovmash

ABSORBING FILTER FPT-200 M

Purpose

The filter FPT-200M is designed to clean the air supplied to the objects from toxic substances, radioactive dust and bacterial agents.

- FPT-200 M is used as a part of filtering systems for mobile objects.

Technical characteristics

Name of indicator	Value of indicator
Nominal amount of air supplied to the absorbing filter, m^3/h, not less	200
Resistance to air flow with air supply in the amount of 200 m^3/h, kgf/m^2, not more	160
Tightness (inward leakage), %, not more than	0,1
Overall dimensions, mm	325x305x360
Weight, kg, not more	20

Shelf life – 10 years

Manufacturer:

JSC Tambovmash

ABSORBING FILTER FPU-200

Purpose

The filter FPU-200 is designed to clean the air from toxic substances, radioactive dust, bacterial agents, as well as toxic and neutral fumes.

- FPU-200 is mounted in the filter-ventilation system designed for use in shelters with a capacity of up to 150 people;
- It is used at ambient temperature from - 50 to + 50°C and relative air humidity up to 95%.

Technical characteristics

Name of indicator	Value of indicator
Maximum air flow through the filter, m^3/h, not less than	200±5
Nominal air flow through the filter, m^3/h, not less	100±5 or 200±5
Tightness (inward leakage), %, not more than	0,1
Overall dimensions of the absorbing filter, mm	497,5x455x407
Filter resistance at nominal air flow rate per 100 m^3/h, mm wg, not more	55
Weight, kg, not more	31

Shelf life:

- in stock - 10 years
- at periodic operation - 5 years

Manufacturer:

JSC Tambovmash

ABSORBING FILTER FP-300 (FP-300-1)

Purpose

The filter FP-300 (FP-300-1) is designed to purify the air supplied to the protective structures from toxic agents, radioactive dust and aerosols, toxic and neutral fumes, and bacterial agents.
FP-300-1 additionally cleans the air from organic vapors of radioactive iodine.

- The filter FP-300 (FP-300-1) is used as a part of filter-ventilation systems at ambient temperature from - 50 to + 50 ° C and relative air humidity up to 95%;
- FP 300 (FP-300-1) absorbing filters are supplied with a set of mounting parts for assembling of the system with one, two or three absorbing filters with a capacity of 300 m³/h, 600 m³/h or 900 m³/h, respectively.

Technical characteristics

Name of indicator	Value of indicator
Nominal amount of air supplied to the filter, m³ / h, not less	300
Resistance to constant air flow, Pa (mm wg), no more than	835 (85)
Tightness (inward leakage) ,%, not more than	0,1
Overall dimensions, mm	580x610x620
Weight, kg, not more	70

Shelf life:

- in stock - 10 years
- at periodic operation - 5 years

Manufacturer:

JSC EHMZ named after N.D.Zelinsky

ABSORBING FILTER FG-70

Purpose

The filter FG-70 is designed to clean the air supplied to the protective constructions from carbon monoxide during pollution from fires and other natural disasters.

- The filter FG-70 is used in filter-ventilation systems at ambient temperature from - 50 to + 60° C and relative air humidity up to 95%.

Technical characteristics

Name of indicator	Value of indicator
Nominal volumetric flow rate of air passing through the filter, m^3/h, not less	70
Resistance to constant air flow, Pa (mm wg), not more	245 (25)
Inward leakage, from nominal air flow, %, not more	0,1
The efficiency of oxidation of carbon monoxide (CO), at the temperature of the gas mixture + 60 ° C, %	99,5
Overall dimensions, mm	450x502x405
Weight, kg, not more	50

Shelf life – 5 years

Manufacturer:

JSC Tambovmash

ABSORBING PREFILTER PFP-1000

Purpose

Absorbing prefilter PFP-1000 is intended for air purification from coarse dust, including radioactive dust, in underground and surface-mounted structures.

- Prefilter PFP-1000 is installed in the air purification system before the absorbing filter;
- It is used at an ambient temperature of - 50 to + 50 ° C, relative humidity of air up to 95% and provided that the drip of unexpected moisture is excluded;
- It is completed with a replaceable coarse filter.

Technical characteristics

Name of indicator	Value of indicator
Nominal air flow through the prefilter, m^3/h, not less	1000
Resistance to constant air flow at a volume air flow rate of 1000 m^3 / hour, Pa (mm wg), not more than	245 (25)
Tightness (inward leakage), %, not more	1
Permeability coefficient for oil mist, %, not more than	14
Overall dimensions, mm	725x505x480
Weight, kg, not more	55

Shelf life – 10 years

Manufacturer:

JSC EHMZ named after N.D.Zelinsky

REGENERATIVE CANISTER RP-100

Purpose

The regenerative canister RP-100 is designed to absorb carbon dioxide from the air of shelters and other protective structures.

- Regenerative canister RP-100 is mounted in filter-ventilation systems with air flow rates of 100, 200, 300 m³/h;
- It is used at temperature from + 18 to + 35 ° C and relative humidity from 30 to 95%.

Technical characteristics

Name of indicator	Value of indicator
Air flow through the canister, m³/h, not less	100
Resistance to constant air flow, mm wg, not more than	27
Overall dimensions, mm	590x500x545
Weight, kg, not more	90

Shelf life – 7,5 years

Manufacturer:

JSC Tambovmash

REGENERATIVE CANISTER RP-2

Purpose

Regenerative canister RP-2 is intended for absorbing carbon dioxide from the air and enriching it with oxygen.

- Regenerative canister RP-2 is used:
  - as part of the regenerative constructions RU-150/6;
  - in filter-ventilation devices of civil defense objects.

Technical characteristics

Name of indicator	Value of indicator
Air flow through the canister, m^3/h, not less	50
Aerodynamic resistance, mm wg, not more	10
Weight, kg, not more	80

Shelf life – 10 years

Manufacturer:

JSC Tambovmash

REGENERATIVE CANISTER P-10

Purpose

Regenerative canister P-10 is designed to regenerate oxygen in the air of a shelter.

- Regenerative cartridge P-10 is used s a part of the regenerative construction «Apparatus 300».

Technical characteristics

Name of indicator	Value of indicator
Air flow through the canister, m^3/h, not less	30
Resistance, Pa (mm wg), not more than	686 (70)
Weight, kg, not more	50

Shelf life – 10 years

Manufacturer:

JSC Tambovmash

VENTILATOR ERV-600/300

Purpose

Ventilator ERV-600/300 is intended for the intake of air, cleaning it with the help of cleaning agents, supplying purified air to protective constructions and creating excessive pressure (back pressure).

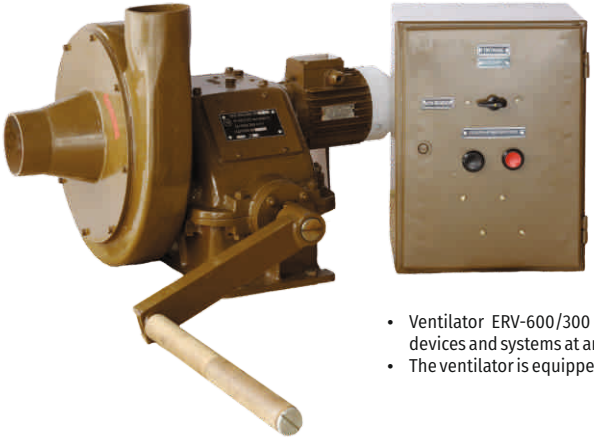

- Ventilator ERV-600/300 is used as a part of filter-ventilation devices and systems at ambient temperature from - 40 to + 50° C;
- The ventilator is equipped with manual and electric drive.

Technical characteristics

Name of indicator	Value of indicator
Volumetric air flow (capacity) of ventilator, m^3 / h, not less: - at pressure of 1226 Pa (125 kgf / m^2) - at pressure of 588 Pa (60 kgf / m^2)	 300 600
Installed power, kW	0,4-0,55
Power supply, V	220/380
Overall dimensions, mm	1020x685x445
Weight, kg, not more than: - ventilator with electric drive - control panel - boxed ventilator	 45 17 100

Shelf life – 5 years

Manufacturer:

JSC Tambovmash

VENTILATOR ERV-49

Purpose

Ventilator ERV-49 is designed for suction and pumping air through the ventilation system.

- Ventilator ERV-600/300 is used as a part of filter-ventilation devices and systems mounted in defenses and shelters;
- The ventilator is equipped with manual and electric drive.

Technical characteristics

Name of indicator	Value of indicator
Productivity by air, m^3/h, not less with a pressure: - 931 (93) Pa (mm wg), not less - 833 (83) Pa (mm wg), not less	 200 300
Power supply, V	220/230 or 220/380
Installed power, kW	0,25
Effort of moving the handle in the manual drive, kg, not more	5,0
Overall dimensions, mm	654x408x400
Weight, kg, not more	18,6

Shelf life – 5 years

Manufacturer:

JSC Tambovmash

REGENERATIVE CONSTRUCTION «APPARATUS-300»

Purpose

The regenerative construction «Apparatus-300» is intended for the regeneration of air by oxygen and carbon dioxide in the premises of shelters of various capacities.

- «Apparatus-300» is a part of an integrated system of cleaning and supplying air (air supply system);
- One device provides air regeneration in shelters with a capacity of 300 people;
- Modular design.

Technical characteristics

Name of indicator	Value of indicator
Flow rate of gas-air flow through the device, m^3/h, not less	400
Aerodynamic resistance, Pa (mm wg), no more than	735(75)
Diameter of connecting pipelines, mm	150
Heat release from the device, kJ/h, not more	84000 (20000 kcal/h)
Occupied space, taking into account the service area for the location of the device in two rows, m^2	5,8
Occupied space, taking into account the service area for the location of the device in one row, m^2	7,5
Mass of the canister, kg, no more	50
Mass of the device, kg, no more	915

Shelf life – 10 years

Manufacturer:

JSC Tambovmash

REGENERATIVE CONSTRUCTION MRU-50/300

Purpose

The regenerative system MRU-50/300 is designed to provide regeneration on air oxygen and carbon dioxide in the premises of shelters at civil defense facilities, including nuclear power plant facilities.

- The construction is mounted in shelters with a capacity of up to 150 people;
- The construction can be operated at a temperature from + 5 to + 60 ° C and relative humidity of the gas-air flow from 55 to 90%;
- It is used when the volumetric content of oxygen in the atmosphere is not less than 18% and the content of carbon dioxide is more than 0,8%;
- Modular design allows you to make the construction in a different configuration of regenerative canisters with an oxygen regeneration capacity from 50 to 300 people, depending on the need and volume of the protective structure.

Shelf life – 10 years

Manufacturer:

JSC Tambovmash

REGENERATIVE CONSTRUCTION RU-150/6

Purpose

The regenerative construction RU-150/6 is intended for the regeneration of air by oxygen in the shelters of civil defense.

- Regenerative construction RU-150/6 can work independently, complete with manual and electric drive ventilator (ERV-600/300 or ERV-49);
- The construction operates on the suction line of the ventilator, joining it through the cooling device of the shelter.

Technical characteristics

Name of indicator	Value of indicator
Construction's capacity, m^3/h, not less	150
Resistance with dust collector at air flow 150 m^3/h, mm wg, not more	50
Total heat emission of the construction, kcal/h, not more	7200
Heat emission from the construction surface to the environment, kcal/h, not more than	1800
Overall dimensions in a box, mm	1530x872x1785
The area required for maintenance of the construction during operation, m^2, not less	9,6
Weight, kg, not more	600

Shelf life – 10 years

Manufacturer:

JSC Tambovmash

MARINE FILTER of FMSH, FMK SERIES (with 1, 2, 4 filter cassettes)

Purpose

Marine filters of FMSH, FMK SERIES are designed for local air purification from gas and vapor impurities and air drying from water vapor.

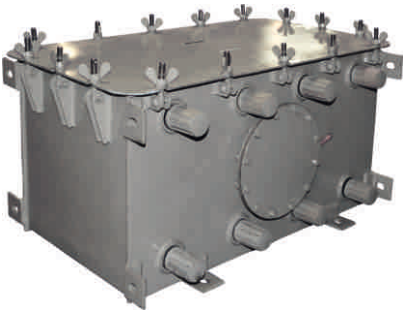

Filter cassette

Complete set:

- metal case;
- filter cassette of FK series (1, 2, or 4 pcs.);
- transport box;
- product passport.

The filter of FMSH series is completed with cassettes of the following modifications:

- FK-U2 – air purification from harmful impurities in the form of gases and vapors;
- FK-P – air purification from carbon monoxide, it is installed after cassettes FK-2U;
- FK-K – air purification from ammonia and hydrogen sulfide;
- FK-V – air purification from aerosols of sulfuric acid, lubricants, diesel fuel, catalyst dust and soot.

Technical characteristics

Name of indicator	Value of indicator
Operating temperature range	From +5°C to +40°C
Relative humidity	From 30% to 95%

Shelf life – 7 years

Manufacturer:

JSC EHMZ named after N.D.Zelinsky

ABSORBING FILTER FPU-200 UB

Purpose

The filter FPU-200 UB is designed to clean the air from toxic substances, radioactive dust, bacterial agents, as well as toxic and neutral fumes.

- FPU-200 UB is mounted in the filter-ventilation system designed for use in shelters with a capacity of up to 150 people;
- It is used at ambient temperature from - 50 to + 50°C and relative air humidity up to 95%.

Technical characteristics

Name of indicator	Value of indicator
Maximum air flow through the filter, m^3/h, not less than	200±5
Nominal air flow through the filter, m^3/h, not less	100±5 or 200±5
Tightness (inward leakage), %, not more than	0,1
Overall dimensions of the absorbing filter, mm	497,5x455x407
Filter resistance at nominal air flow rate per 100 m^3/h, mm wg, not more	55
Weight, kg, not more	31

Shelf life:

- in stock - 10 years
- at periodic operation - 5 years

Manufacturer:

JSC Tambovmash

ABSORBING FILTER FP-300 UB (FP-300-26E)

Purpose

The filter FP-300 UB (FP-300-26E) is designed to purify the air supplied to the protective structures from toxic agents, radioactive dust and aerosols, toxic and neutral fumes, and bacterial agents.
FP-300-26E additionally cleans the air from organic vapors of radioactive iodine.

- The filter FP-300 UB (FP-300-26E) is used as a part of filter-ventilation systems at ambient temperature from - 50 to + 50° C and relative air humidity up to 95%;
- FP 300 (FP-300-1) absorbing filters are supplied with a set of mounting parts for assembling of the system with one, two or three absorbing filters with a capacity of 300 m^3/h, 600 m^3/h or 900 m^3/h, respectively.

Technical characteristics

Name of indicator	Value of indicator
Nominal amount of air supplied to the filter, m^3 / h, not less	300
Resistance to constant air flow, Pa (mm wg), no more than	835 (85)
Tightness (inward leakage) ,%, not more than	0,1
Overall dimensions, mm	580x610x620
Weight, kg, not more	70

Shelf life:

- in stock - 10 years
- at periodic operation - 5 years

Manufacturer:

JSC EHMZ named after N.D.Zelinsky

MARINE FILTER of FKS, FSHS SERIES (with 1, 2, 4 filter cassettes)

Purpose

Marine filters of FKS, FSHS SERIES are designed for local air purification from gas and vapor impurities and air drying from water vapor.

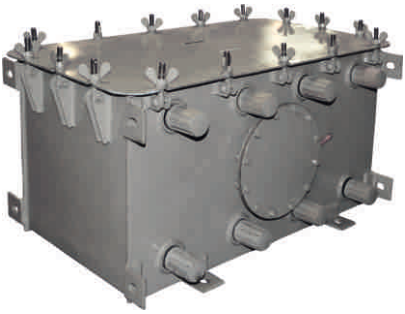

Filter cassette

Complete set:

- metal case;
- filter cassette of FK series (1, 2, or 4 pcs.);
- transport box;
- product passport.

The filter of FMSH series is completed with cassettes of the following modifications:

- FK-U2 – air purification from harmful impurities in the form of gases and vapors;
- FK-P – air purification from carbon monoxide, it is installed after cassettes FK-2U;
- FK-K – air purification from ammonia and hydrogen sulfide;
- FK-V – air purification from aerosols of sulfuric acid, lubricants, diesel fuel, catalyst dust and soot.

Technical characteristics

Name of indicator	Value of indicator
Operating temperature range	From +5°C to +40°C
Relative humidity	From 30% to 95%

Shelf life – 7 years

Manufacturer:

JSC EHMZ named after N.D.Zelinsky

Zelinsky Group Ltd.
57, Dubininskaya str., Moscow, Russia, 115054
Phone: + 7-916-81-42-136
export@zelinskygroup.com
www.en.protivogaz.ru
www.en.zelinskygroup.com